ALU 100 NEO Glass

The solution for modern room design with all-glass sliding doors up to a weight of 100 kg. The latest design of the GLM glass clamp has an anodized finish and improved ease of assembly. The slim aluminium cover elegantly conceals the suspension hardware and creates a uniform look.

Hanger
RX100A, 2 pieces

Glass clamp
GLM 274087M, 2 pieces

Adjustable stopper
SX 100H, 2 pieces

Floor guide
T-Guide Glas

Track
T365, 2250 mm

Cover
B259, 2250 mm

End caps set
177429-24

Fastening material

Tool

Complete-Set ALU 100 NEO Glass	Article Number
Anodized aluminium, EV1, silver	NEO100Glas
Anodized aluminium, C31, stainless-steel-look	NEO100GlasC

Technical Notes

Maximum Door Weight	100 kg
Height	63 ± 3 mm
Door Leaf Thickness	8 – 10 mm
Maximum Door Width	1125 mm
Minimum Door Width	500 mm

Classification according to DIN EN 1527
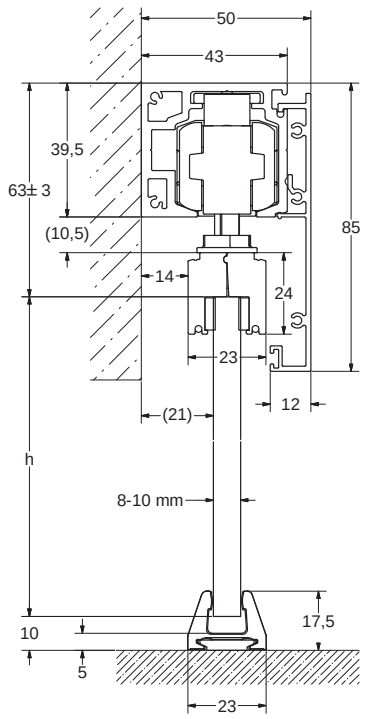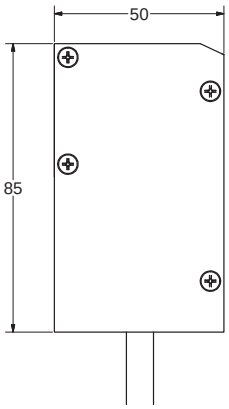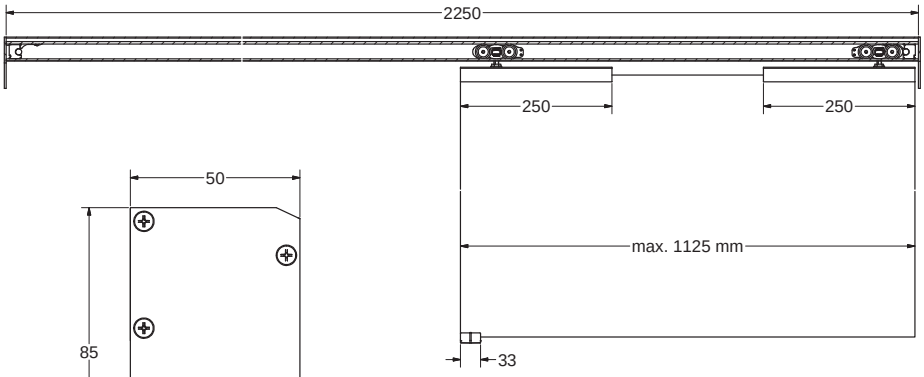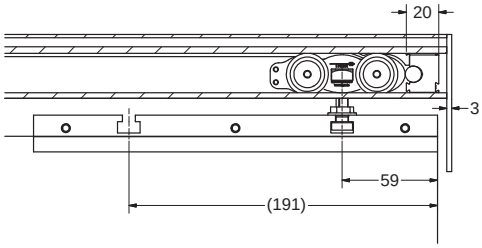
Use Category	Durability	Door Weight	Fire Resistance	Safety	Corrosion Resistance	Security	Door Type	Initial Friction
–	6	2	0	–	0	–	1	3